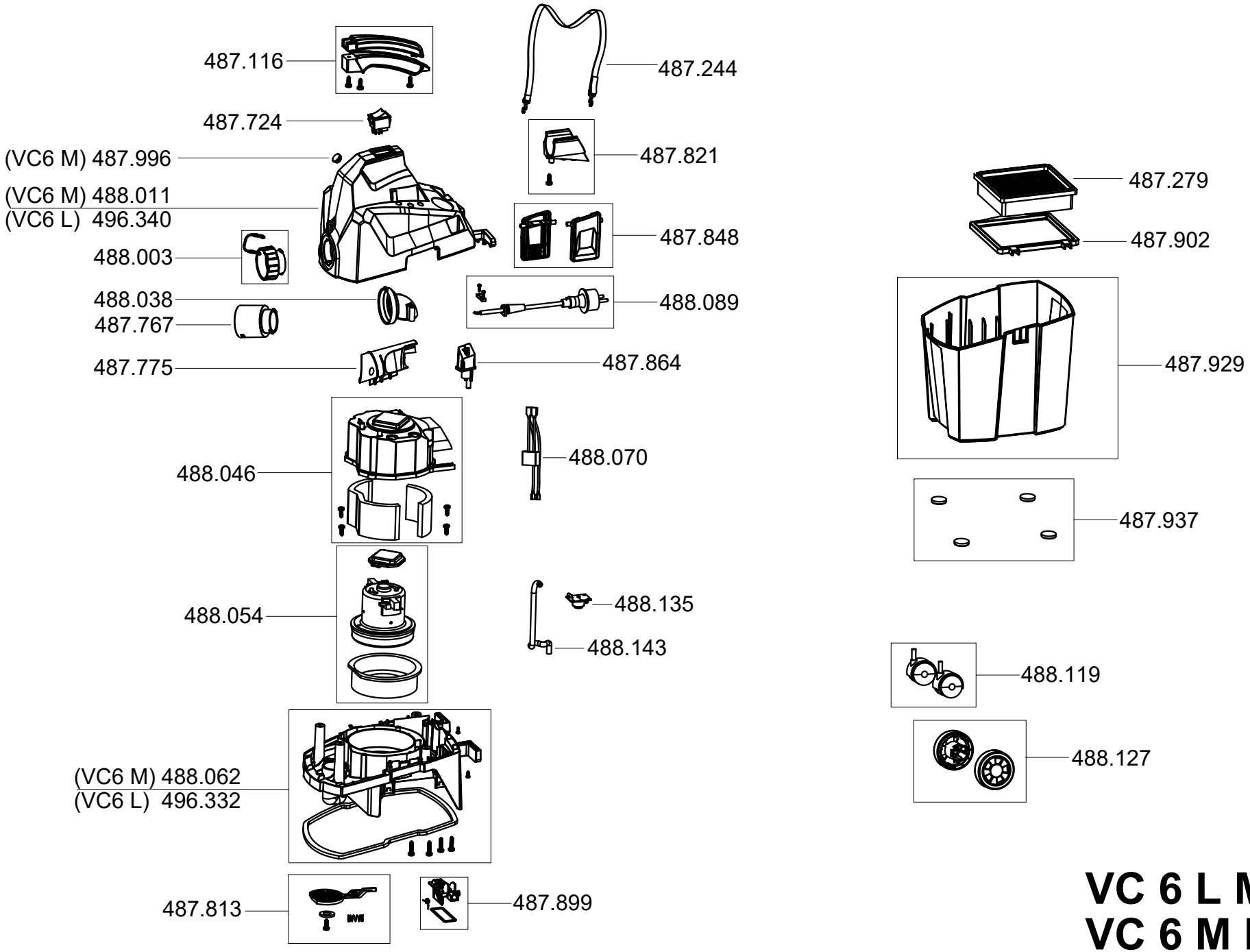

VC 6 L MC
VC 6 M MC

ETL-Nr. 493.899 Stand 11/19